ZINTL®

TYPICAL VERTICAL FIXING DETAIL

Vertical Cladding Wall Layout

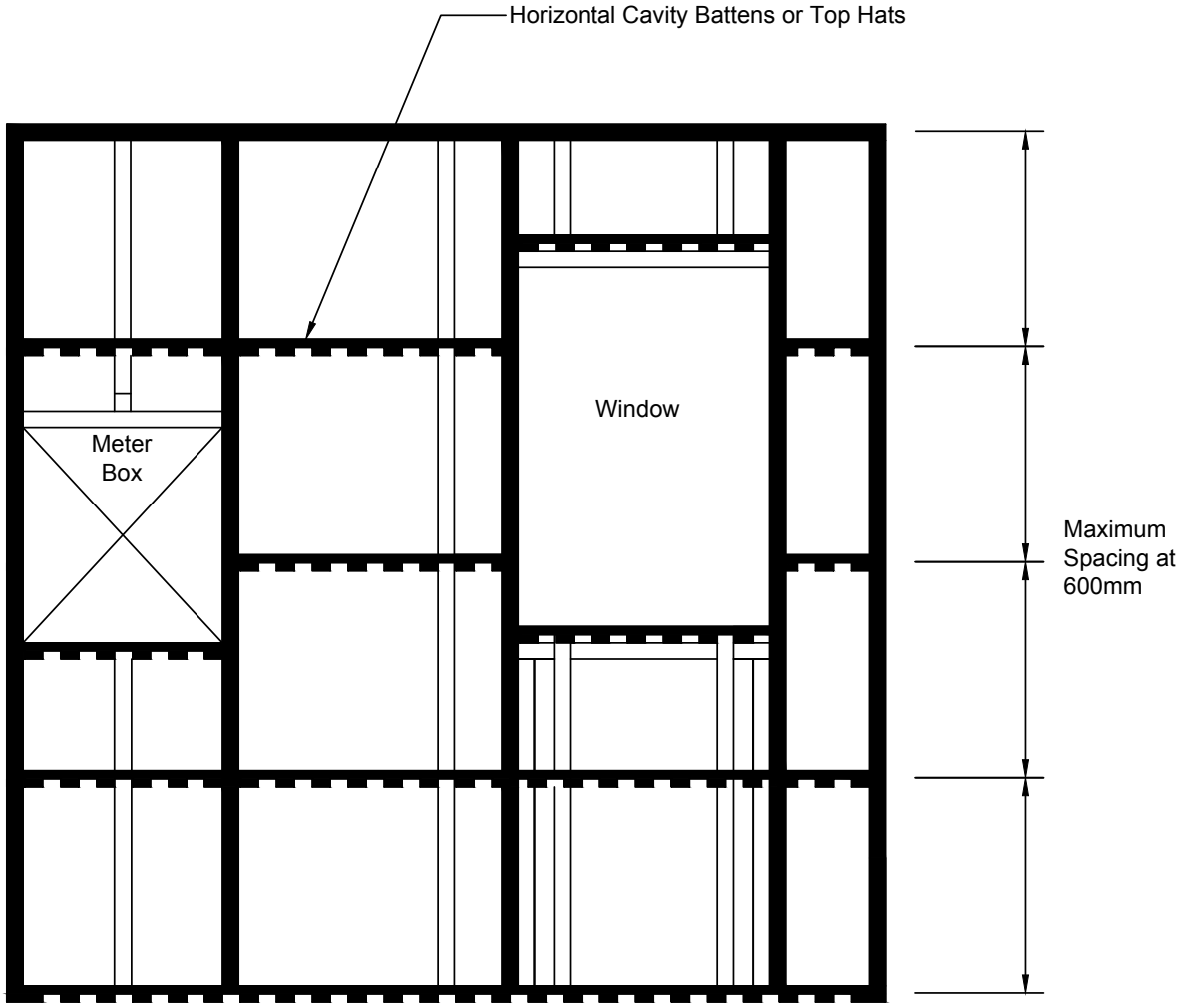

TYPICAL VERTICAL FIXING DETAIL

This information is generic in nature and supplied for guidance purposes only. Top Hat dimensions are nominal. Dimensions, spacing, spans and stiffener requirements will need to be confirmed by a suitably qualified professional to suit the specific application.

By HVG façades

hvgfacades.com.au
1300 881 712
info@hvgfacades.com.au

ZINTL®

TYPICAL VERTICAL FIXING DETAIL

Vertical Cladding
Wall Starter

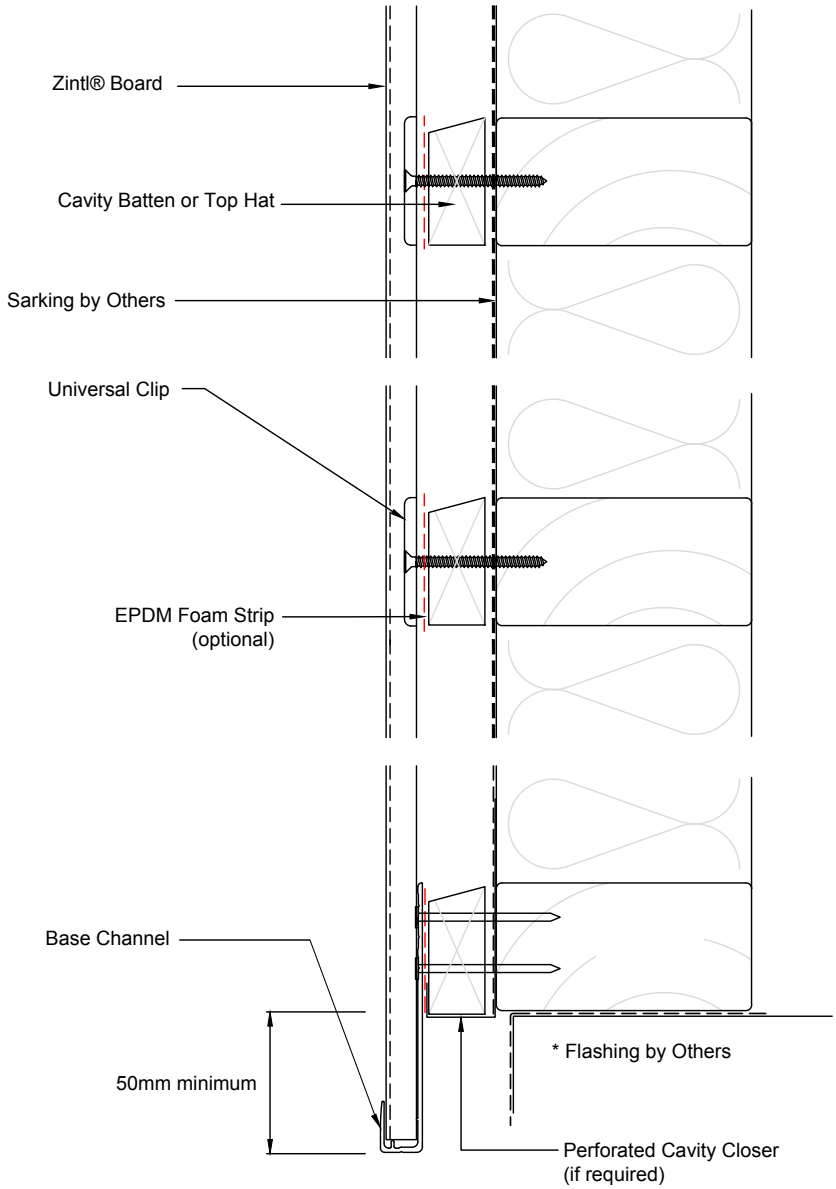

TYPICAL VERTICAL FIXING DETAIL

This information is generic in nature and supplied for guidance purposes only. Top Hat dimensions are nominal. Dimensions, spacing, spans and stiffener requirements will need to be confirmed by a suitably qualified professional to suit the specific application.

By HVG façades

hvgfacades.com.au
1300 881 712
info@hvgfacades.com.au

ZINTL®

TYPICAL VERTICAL FIXING DETAIL

Vertical Cladding
External Corner

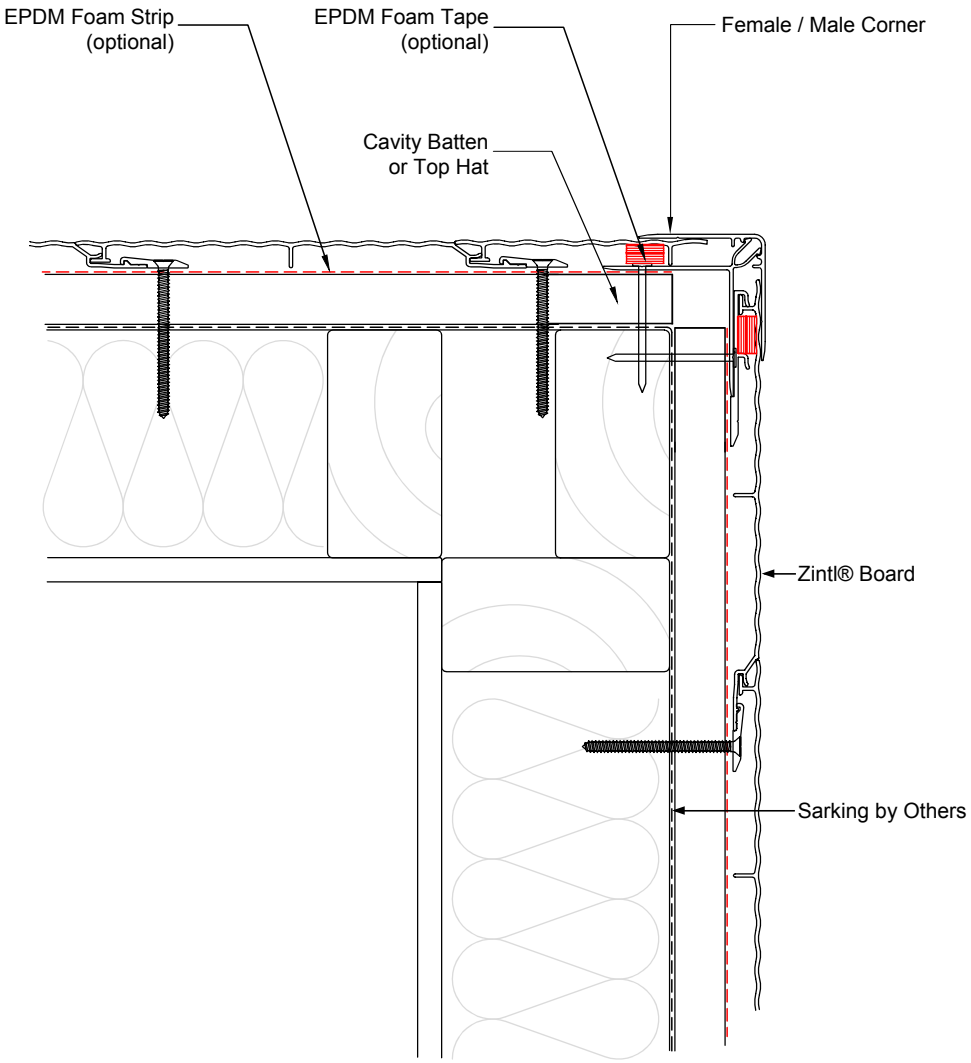

TYPICAL VERTICAL FIXING DETAIL

This information is generic in nature and supplied for guidance purposes only. Top Hat dimensions are nominal. Dimensions, spacing, spans and stiffener requirements will need to be confirmed by a suitably qualified professional to suit the specific application.

By HVG façades

hvgfacades.com.au
1300 881 712
info@hvgfacades.com.au

ZINTL®

TYPICAL VERTICAL FIXING DETAIL

Vertical Cladding
Internal Corner

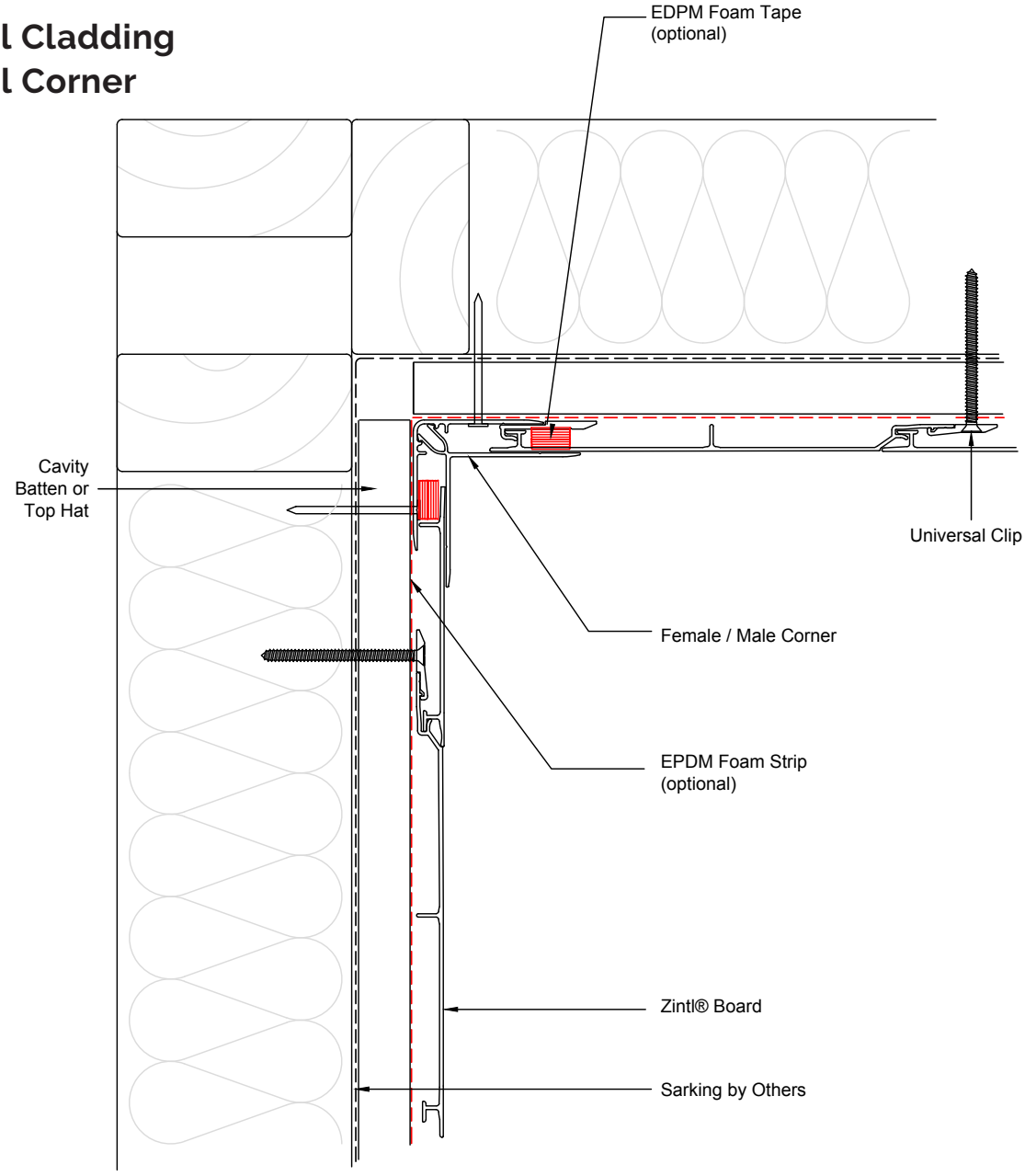

TYPICAL VERTICAL FIXING DETAIL

This information is generic in nature and supplied for guidance purposes only. Top Hat dimensions are nominal. Dimensions, spacing, spans and stiffener requirements will need to be confirmed by a suitably qualified professional to suit the specific application.

By HVG façades

hvgfacades.com.au
1300 881 712
info@hvgfacades.com.au

ZINTL®

TYPICAL VERTICAL FIXING DETAIL

Vertical Cladding
Inter-Storey Jointer

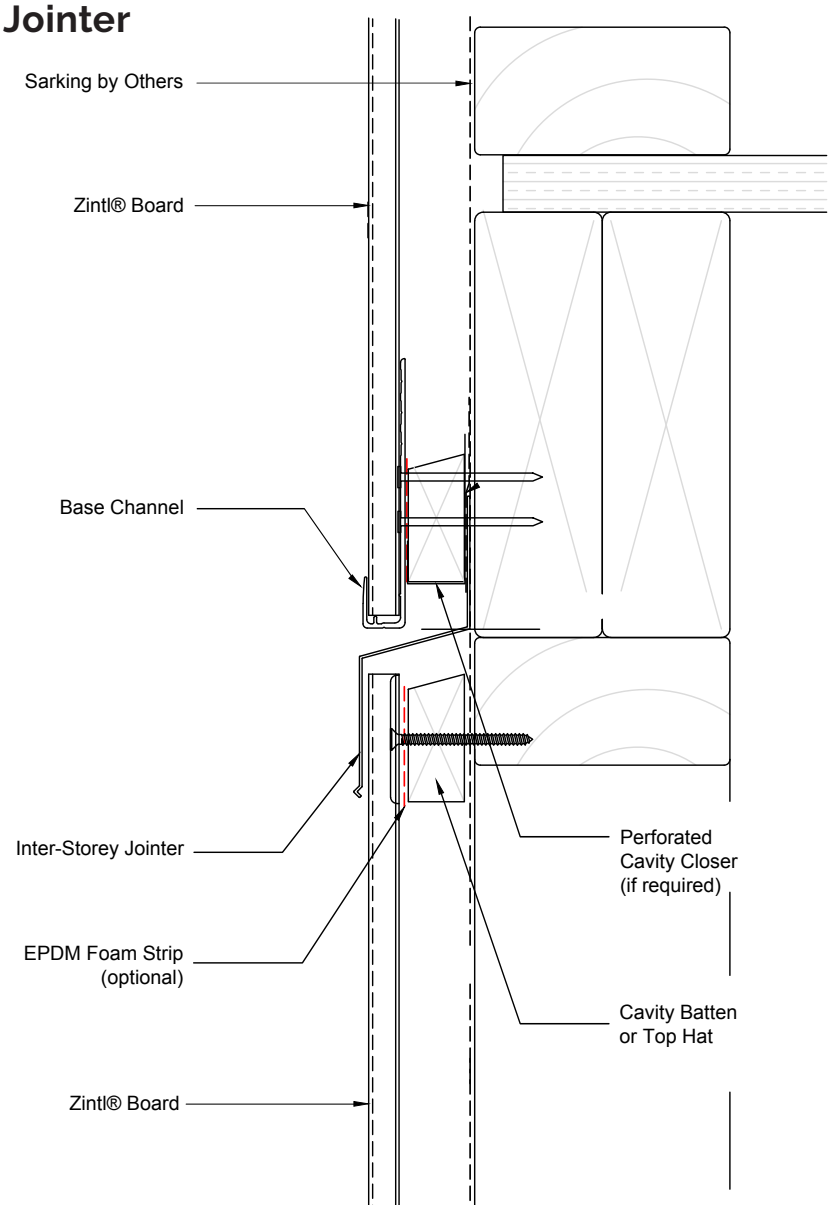

TYPICAL VERTICAL FIXING DETAIL

This information is generic in nature and supplied for guidance purposes only. Top Hat dimensions are nominal. Dimensions, spacing, spans and stiffener requirements will need to be confirmed by a suitably qualified professional to suit the specific application.

By HVG façades

hvgfacades.com.au
1300 881 712
info@hvgfacades.com.au

ZINTL®

TYPICAL VERTICAL FIXING DETAIL

Vertical Cladding
Window Sill

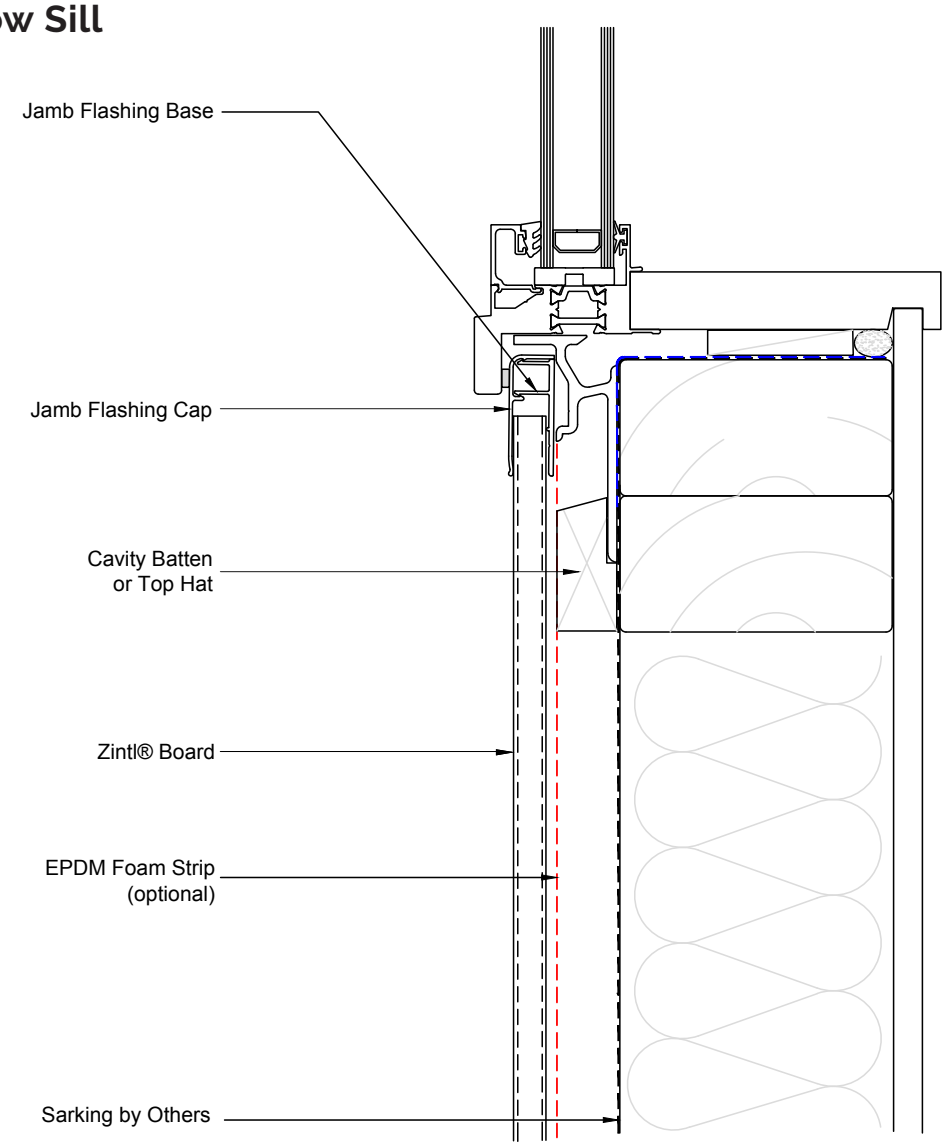

TYPICAL VERTICAL FIXING DETAIL

This information is generic in nature and supplied for guidance purposes only. Top Hat dimensions are nominal. Dimensions, spacing, spans and stiffener requirements will need to be confirmed by a suitably qualified professional to suit the specific application.

By HVG façades

hvgfacades.com.au
1300 881 712
info@hvgfacades.com.au

ZINTL®

TYPICAL VERTICAL FIXING DETAIL

Vertical Cladding
Window Jamb

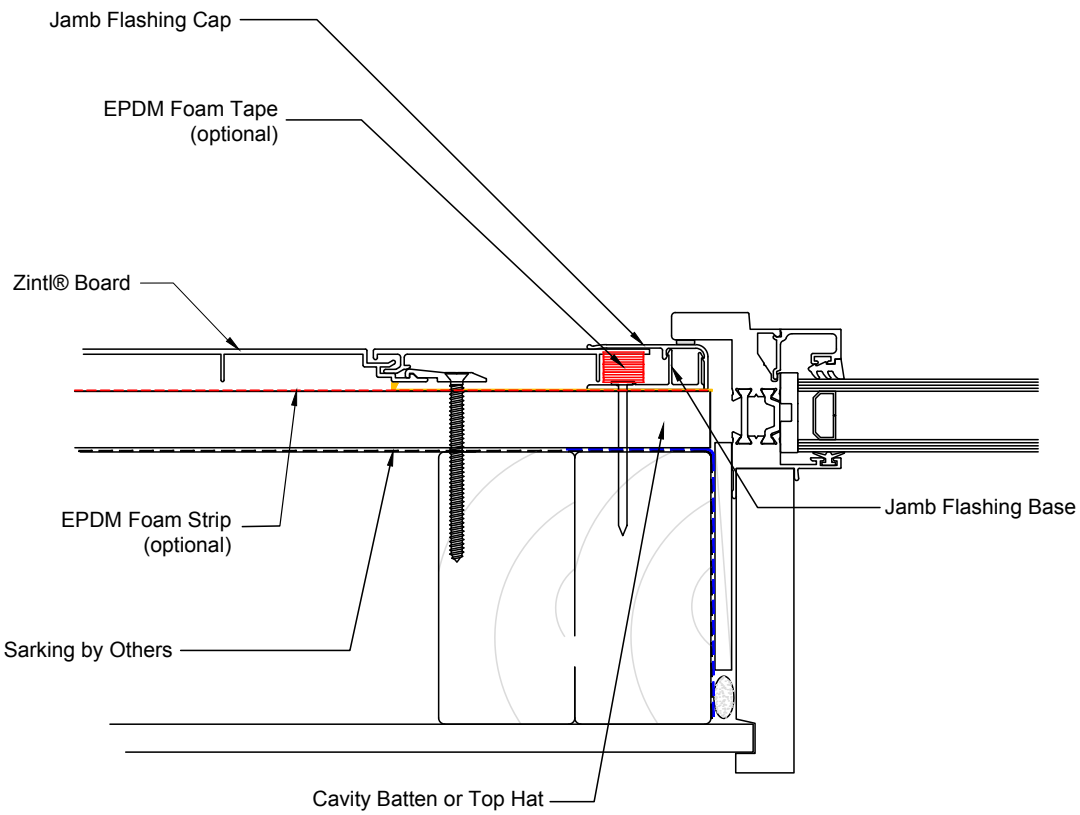

TYPICAL VERTICAL FIXING DETAIL

This information is generic in nature and supplied for guidance purposes only. Top Hat dimensions are nominal. Dimensions, spacing, spans and stiffener requirements will need to be confirmed by a suitably qualified professional to suit the specific application.

By HVG façades

hvgfacades.com.au
1300 881 712
info@hvgfacades.com.au

ZINTL®

TYPICAL VERTICAL FIXING DETAIL

Vertical Cladding Window Head

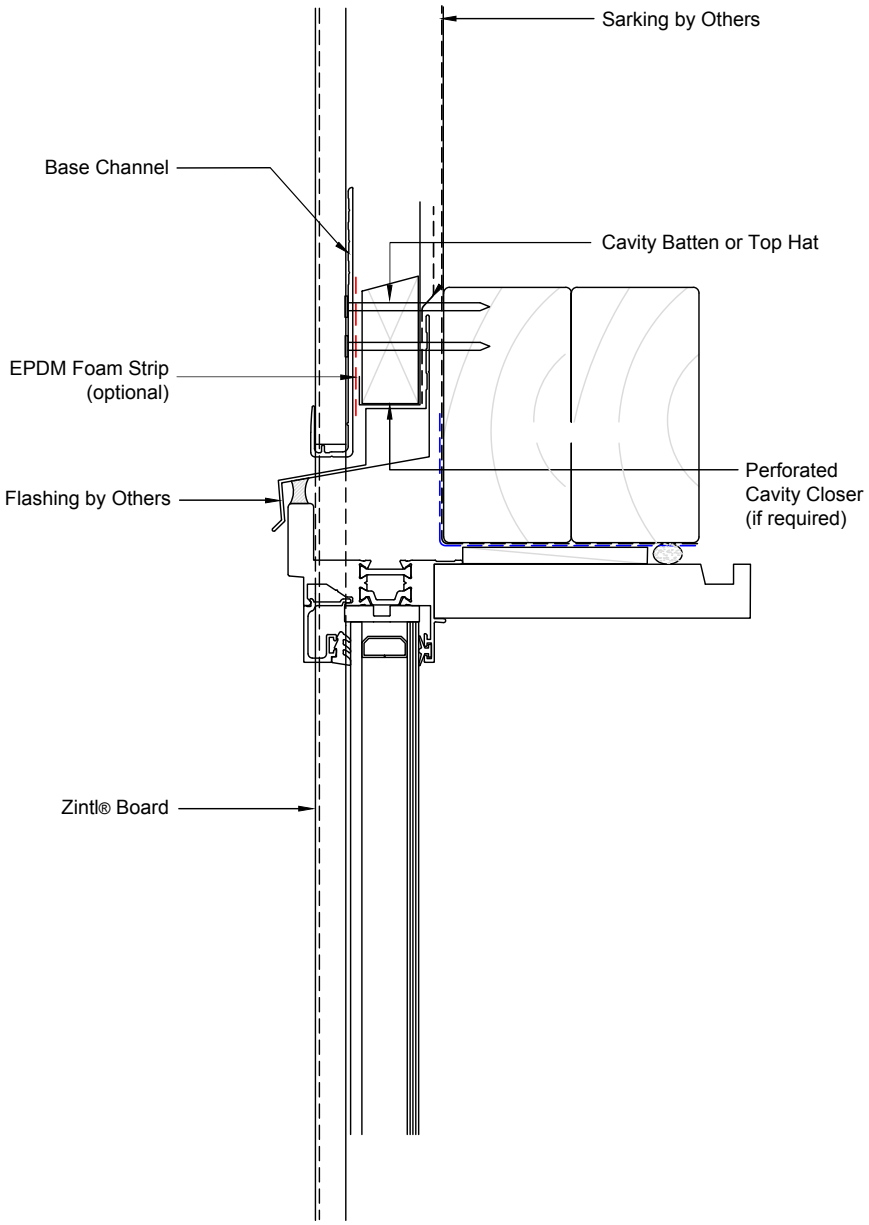

TYPICAL VERTICAL FIXING DETAIL

This information is generic in nature and supplied for guidance purposes only. Top Hat dimensions are nominal. Dimensions, spacing, spans and stiffener requirements will need to be confirmed by a suitably qualified professional to suit the specific application.

By HVG façades

hvgfacades.com.au
1300 881 712
info@hvgfacades.com.au

ZINTL®

TYPICAL VERTICAL FIXING DETAIL

Vertical Cladding
Meter Box Sill

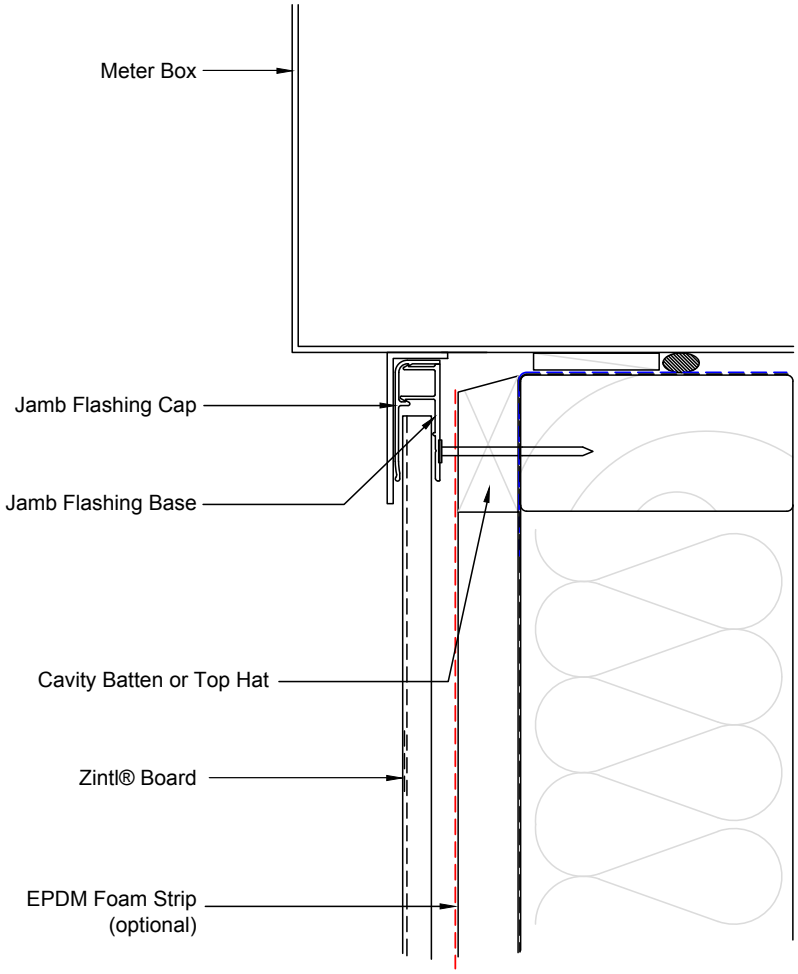

TYPICAL VERTICAL FIXING DETAIL

This information is generic in nature and supplied for guidance purposes only. Top Hat dimensions are nominal. Dimensions, spacing, spans and stiffener requirements will need to be confirmed by a suitably qualified professional to suit the specific application.

By HVG façades

hvgfacades.com.au
1300 881 712
info@hvgfacades.com.au

ZINTL®

TYPICAL VERTICAL FIXING DETAIL

Vertical Cladding
Meter Box Head

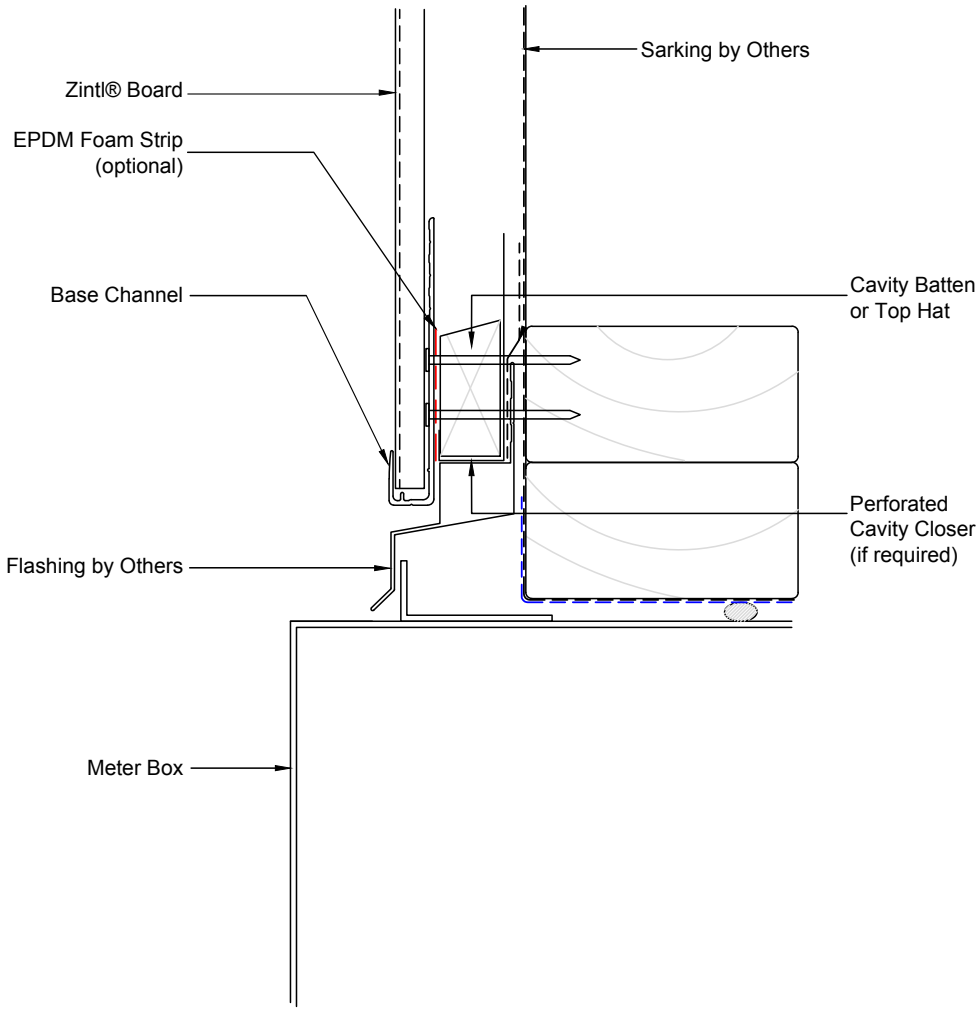

TYPICAL VERTICAL FIXING DETAIL

This information is generic in nature and supplied for guidance purposes only. Top Hat dimensions are nominal. Dimensions, spacing, spans and stiffener requirements will need to be confirmed by a suitably qualified professional to suit the specific application.

By HVG façades

hvgfacades.com.au
1300 881 712
info@hvgfacades.com.au

ZINTL®

TYPICAL VERTICAL FIXING DETAIL

Vertical Cladding
Softfit Trim

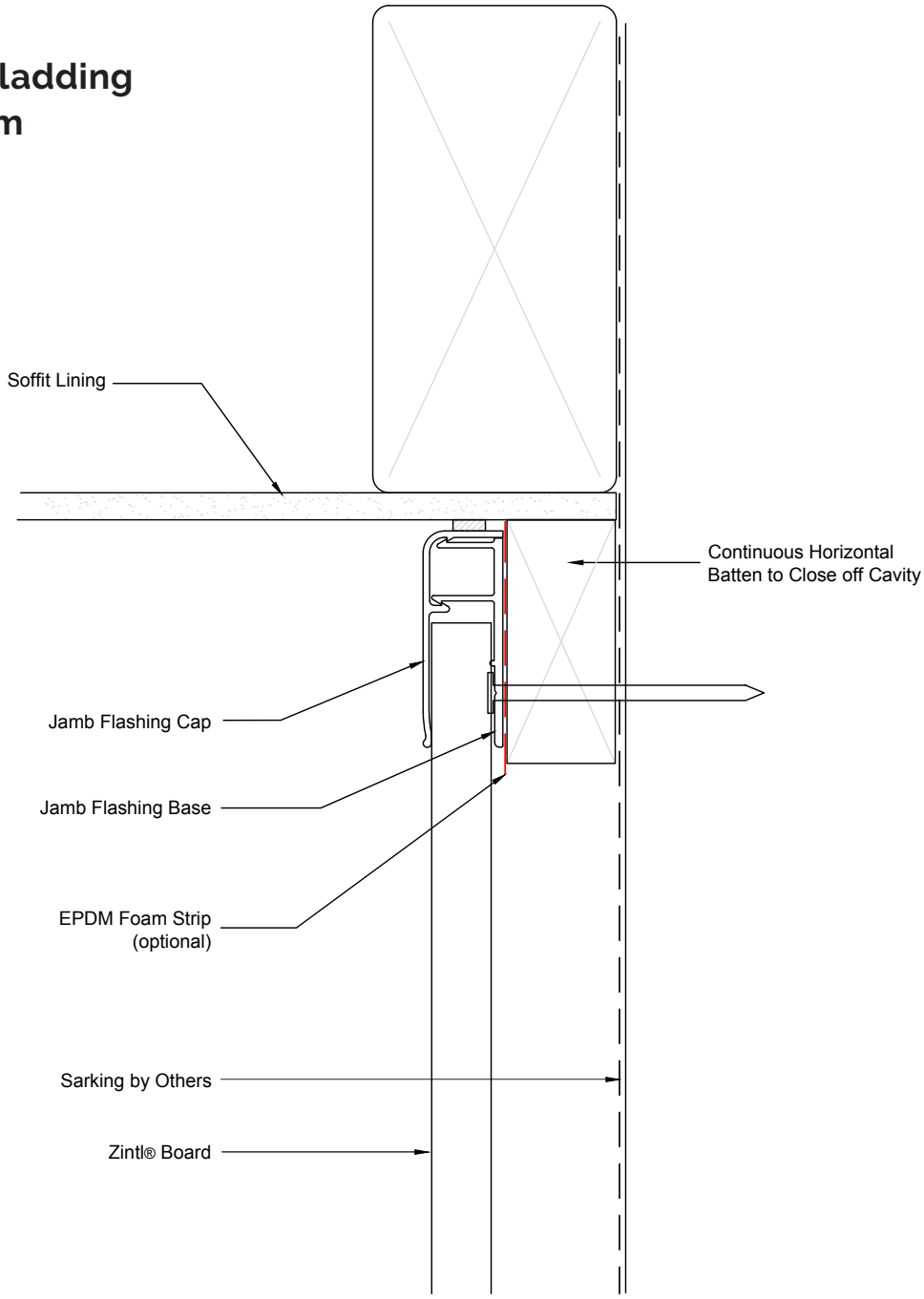

TYPICAL VERTICAL FIXING DETAIL

This information is generic in nature and supplied for guidance purposes only. Top Hat dimensions are nominal. Dimensions, spacing, spans and stiffener requirements will need to be confirmed by a suitably qualified professional to suit the specific application.

By HVG façades

hvgfacades.com.au
1300 881 712
info@hvgfacades.com.au

ZINTL®

TYPICAL VERTICAL FIXING DETAIL

Vertical Cladding
Roof / Wall Junction

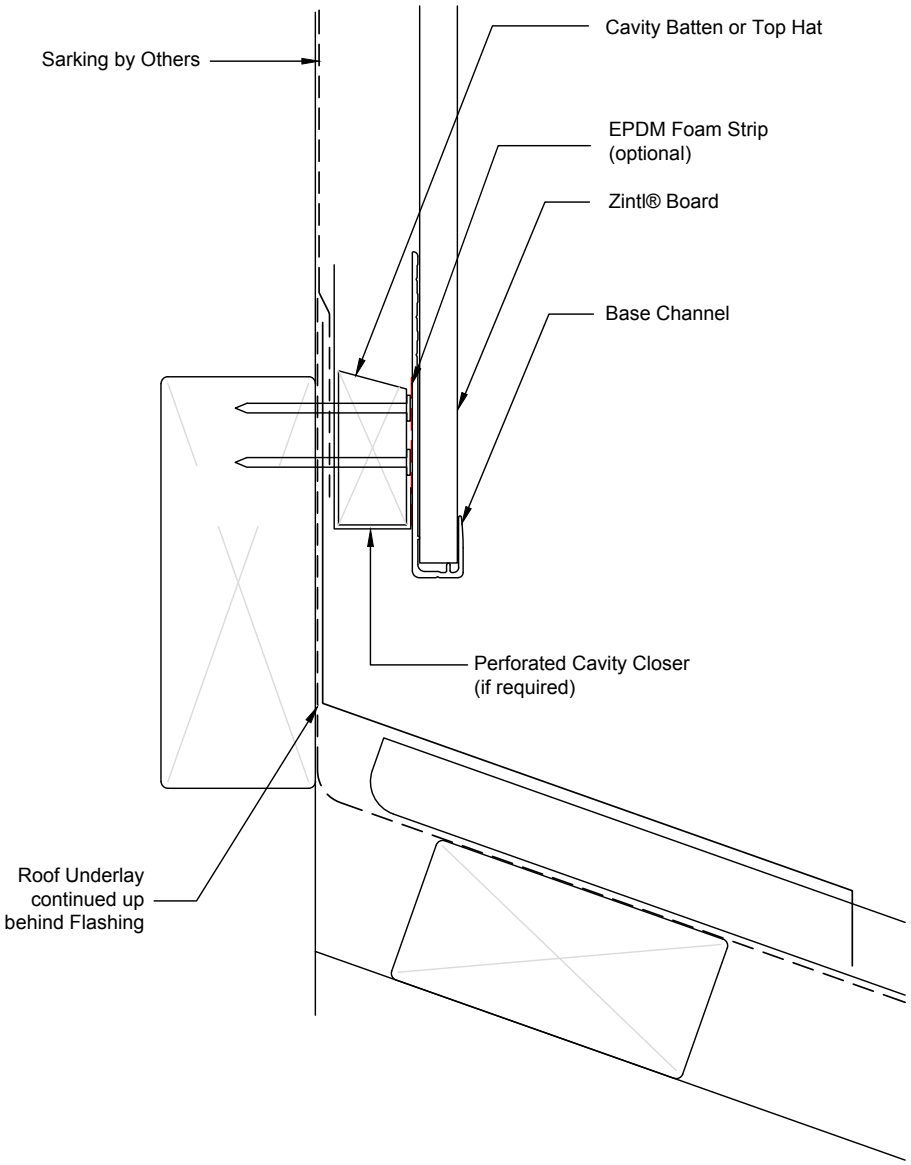

TYPICAL VERTICAL FIXING DETAIL

This information is generic in nature and supplied for guidance purposes only. Top Hat dimensions are nominal. Dimensions, spacing, spans and stiffener requirements will need to be confirmed by a suitably qualified professional to suit the specific application.

By HVG façades

hvgfacades.com.au
1300 881 712
info@hvgfacades.com.au

ZINTL®

TYPICAL VERTICAL FIXING DETAIL

Vertical Cladding
Parapet Flashing

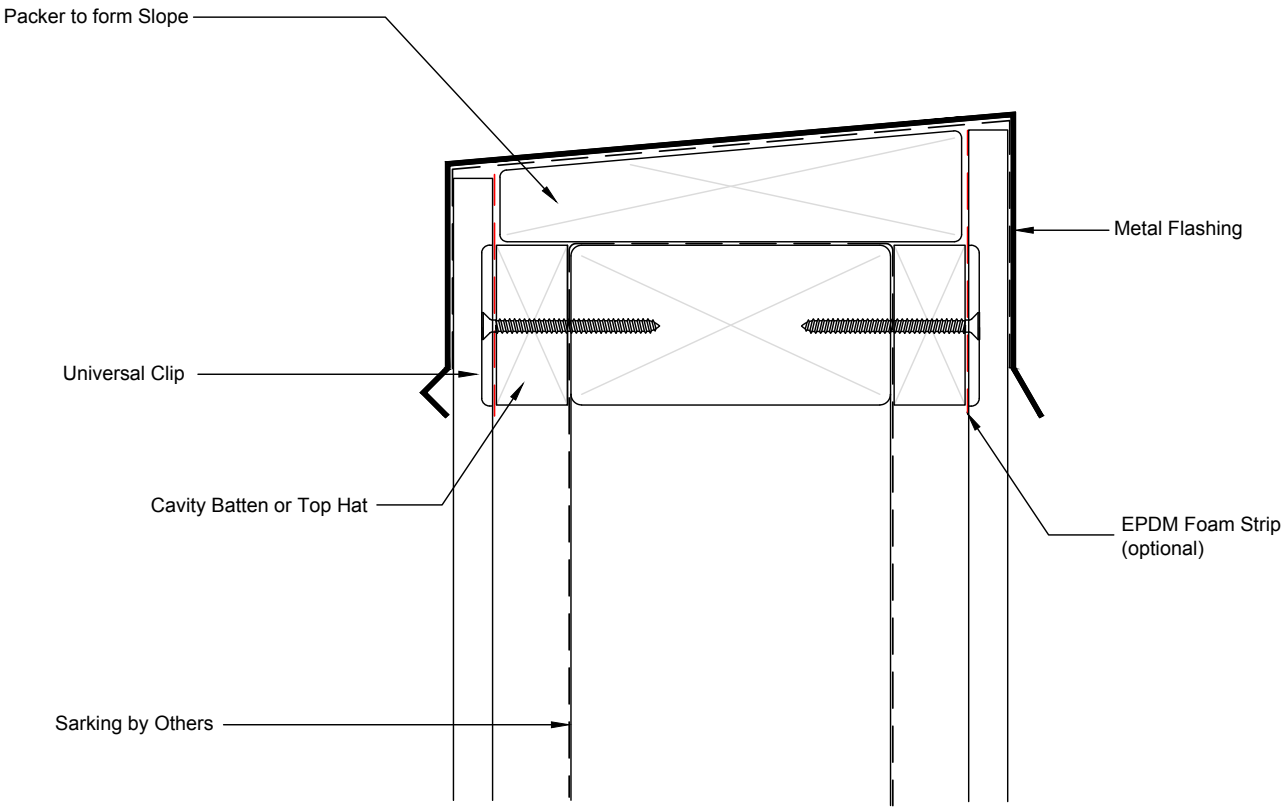

TYPICAL VERTICAL FIXING DETAIL

This information is generic in nature and supplied for guidance purposes only. Top Hat dimensions are nominal. Dimensions, spacing, spans and stiffener requirements will need to be confirmed by a suitably qualified professional to suit the specific application.

By HVG façades

hvgfacades.com.au
1300 881 712
info@hvgfacades.com.au